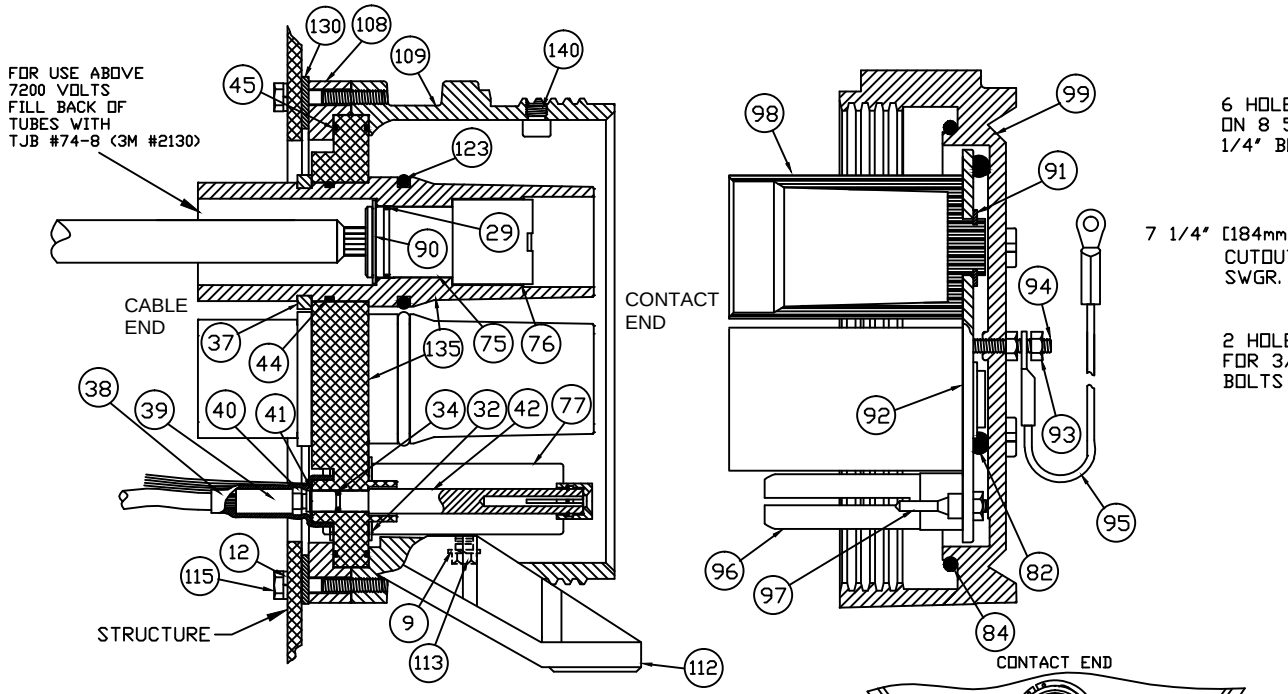

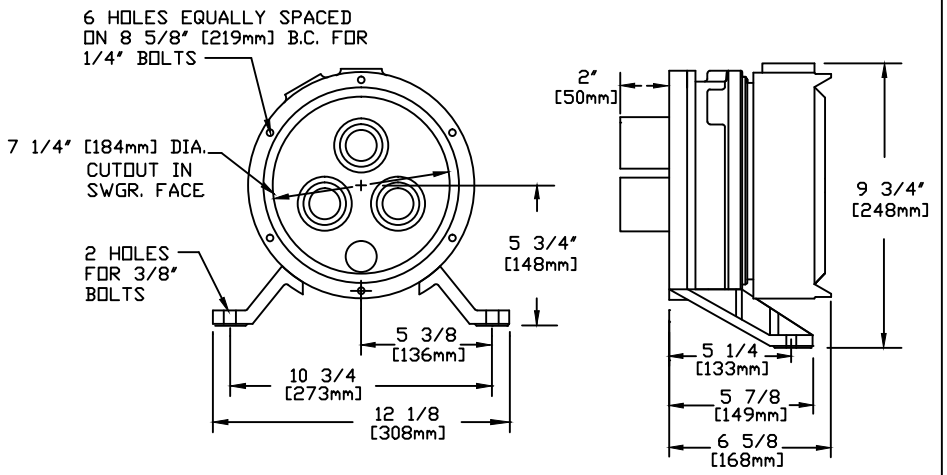

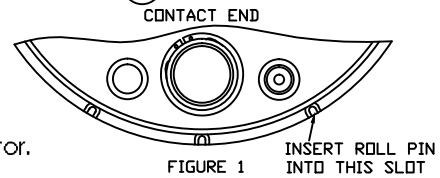

FIGURE 1

1. Layout and drill the mounting holes as shown.
2. Remove 1-1/2" (38mm) of the insulation from the end of the conductor.
3. **DO NOT INSTALL THE RETAINING RINGS BEFORE SOLDERING**
4. **When soldering be careful not to overflow the solder.** Prior to soldering, apply Teflon tape to the grooves on the back of the contacts to prevent solder from filling in the grooves, or use an acid brush to remove the solder from the groove while the contact is still hot.
5. Solder attach the phase conductors into the phase contacts (75) using (preferably) 50-50 solder. **DO NOT** cool the contact with water as this may cause a cold solder joint (high resistance).
6. Solder attach the ground lead into the ground contact (77),
7. Strip 1/2" (13cm) of insulation from the ground check conductor and solder attach it to the solder pot (39)
8. On all three phases and the one ground contact, install the plated steel retaining rings (90) into the groove closest to the conductor, then insert the o-rings (29) into the second wider groove.
9. Slide the insulator over the phase contacts and thread the nuts (76) onto the contacts. Next insert the ground contact (77) into the insulator plate and install the stainless steel retaining ring (32).
10. Slide the heat shrink tubing (38) over the ground check conductor, then while holding the solder pot in place, turn the ground check contact (42) from the front side, threading it into the solder pot until the brass nut (40) is finger tight against the solder pot. Then tighten the nut (40) with a wrench while holding the solder pot with pliers.
11. Slide the shrink tube over the solder pot and the ground check extension on the insulator plate. While shrinking it into place with a heat gun or small flame, put slight pressure on the shrink tube to keep it seated on the insulator plate. The shrink tube contains a sealant to prevent moisture contamination of the joint.
12. Make sure while installing the insulator assembly into the socket body, that the 1/8" roll pin in the socket body is aligned with the slot in the insulator plate as shown in figure 1.

ITEM NO.	QTY	PART No.	DESCRIPTION
X	1	204	1/4-20 X 1 FLAT HEAD SCREW
XX	2	181	1/4-20 X 5/8 HEX HEAD CAPSCREW
9	4	190A	5/16 LOCKWASHER
12	7	202	1/4" LOCKWASHER
29	4	228	CONTACT O-RING
32	1	173S	1-1/4" RETAINING RING - STAINLESS STEEL
34	1	519	GROUND CHECK O-RING
37	3	574	RETAINING RING-INSULATOR TUBE
38	1	180	3" GROUND CHECK SHRINK TUBE
39	1	135	GROUND CHECK TERMINAL
40	1	177	1/4-20 HEX BRASS JAM NUT
41	1	517	3/8" GROUND CHECK RETAINING RING
42	1	523/COMP	FEMALE GROUND CHECK ASSEMBLY
44	3	584	COMPOUND O-RING
45	2	520	INSULATOR O-RING
75	3	101-6	FEMALE THREADED PHASE CONTACT
76	3	241	FEMALE PHASE CONTACT NUT
77	1	143	FEMALE GROUND CONTACT
82	3	184	NYLON BALLS
84	1	169	O-RING
90	4	173	1-1/4" RETAINING RING - PLATED STEEL
91	3	581	PTFE CUP "C" CLIP
92	1	582	INTERLOCK PLATE FOR PTFE CUPS
93	2	194	1/4-20 HEX STEEL LOCKNUT
94	1	207S	1/4-20 X 1-3/4 BUTTON HEAD SCREW
95	1	171D	COVER CABLE
96	1	129	MALE INTERLOCK GROUND CONTACT
97	1	140	MALE INTERLOCK GROUND CHECK CONTACT
98	3	580	PTFE INTERLOCK INSULATING CUPS
99	1	113-DI	4-PITCH SOCKET INTERLOCK COVER
108	1	122	SOCKET SWITCHGEAR FLANGE
109	1	109D	4-PITCH SOCKET BODY
112	1	110AR/AL	SOCKET FEET-RIGHT AND LEFT
113	4	172	5/16-18 X 7/8 HEX HEAD CAPSCREW
115	6	174A	1/4-20 X 1-3/4 HEX HEAD CAPSCREW
123	3	575	O-RING FOR PTFE INSULATOR TUBE
130	1	126S	NEOPRENE GASKET
135	1	300-104T	FEMALE INSULATOR ASSEMBLY-PTFE TUBES
140	1	185J	AUTOLIGN PIN